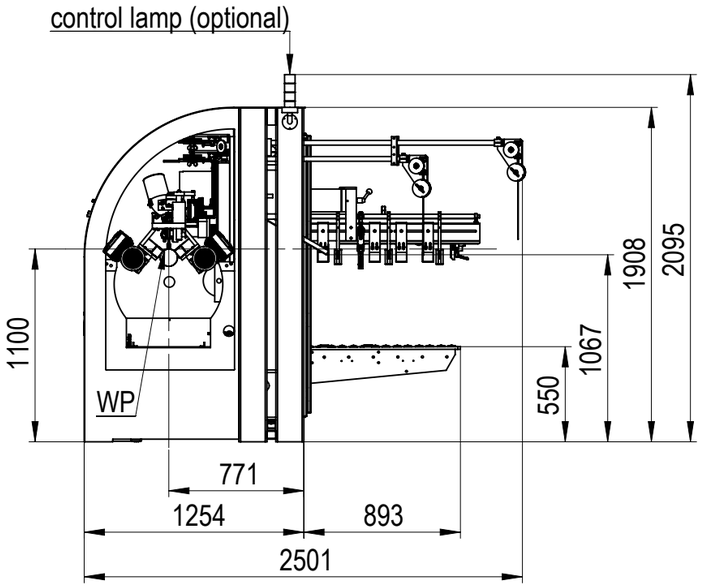

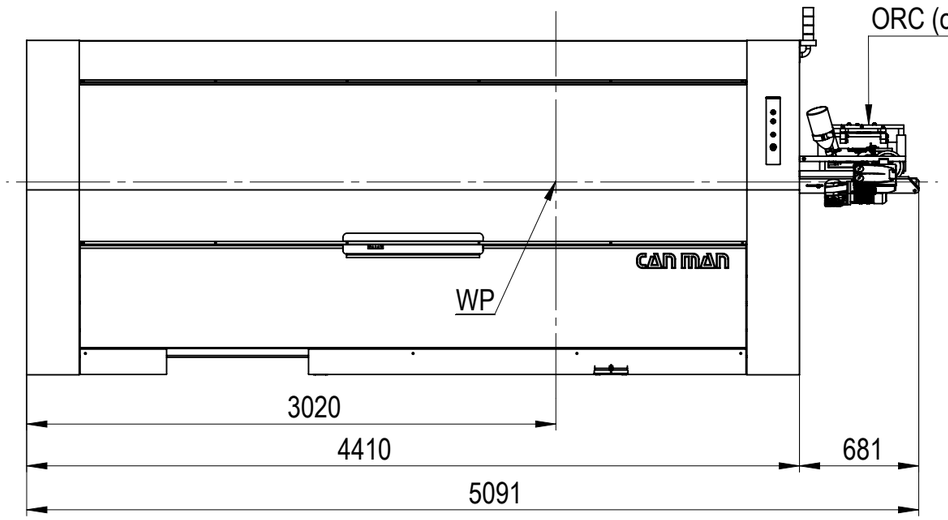

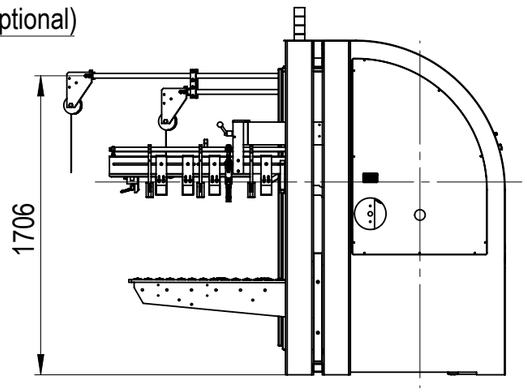

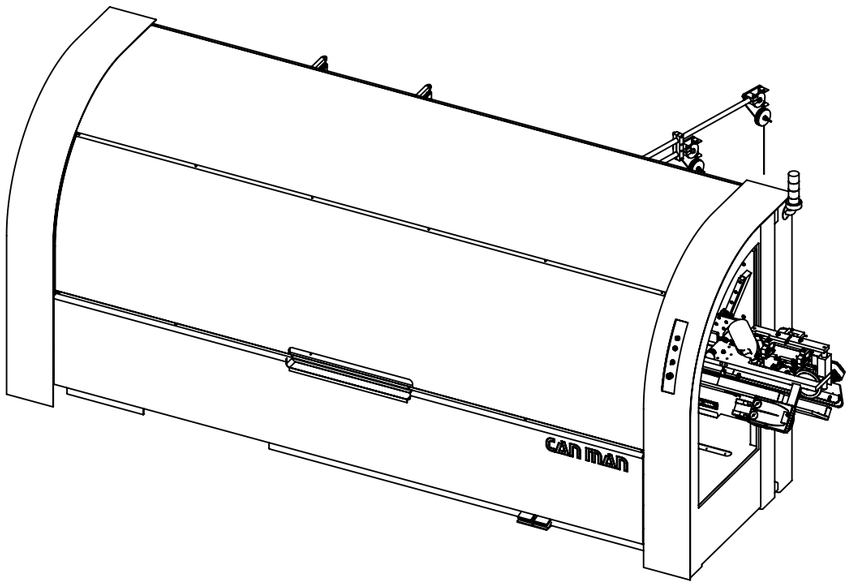

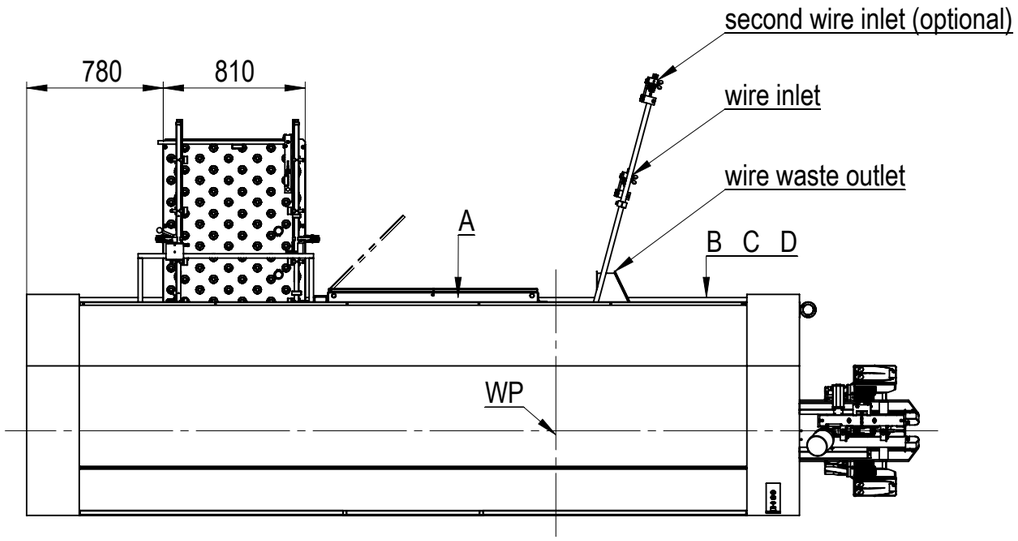

Machine colour:
RAL 9006 = white-aluminium, bright
RAL 4008 = signal violet

Ambient: +5°C ... +45°C
Relative humidity: max. 85%

min floor loading: 1500 kg/m²

WP = Welding point

	A	B	C	D
X5	Electrical Supply 3x400 VAC+N+Ground Power: 35 kVA Control voltage: 24 VDC Fuse: 3 x 32 A	Water inlet Connection G 1/2" Pressure 5 ... 6 bar Pump capacity min 25 l/min Cooling power min 10 kW	Water outlet Connection G 3/4" Backpressure max 1 bar	Air Supply Connection: G 1/2" Pressure min: 5 bar Consumption: 5...20 m³/h
Chiller	Electrical Supply 3x400 VAC+N+Ground Power: 4.5 kW Cooling power 10.5 kW	Water inlet Temperature 5...25° Environment temp. 10...43°	Water outlet Connection G 1/2" Pressure 6 bar Pump capacity min 25 l/min	Air Consumption 5640 m³/h

Material:	Oberfläche:	Bemerkung: **Technical changes reserved !**
Dimension:	Masse in kg: **kg**	
Bezeichnung: X5 WeldCENTER™ Layout		Schutzvermerk nach DIN 34 beachten.
		Massstab 1:35 · Gezeichnet **mwi** **04.09.2015** · Geprüft **ER** **24.04.2018** · Filemaker-Nr 009909
	Format: **A3**	Blatt: **1 / 1** · zuletzt gespeichert am: Dienstag, 24. April 2018 15:45:56
CAN MAN		15_00_00000 -